A Nidec Group Company
Nidec Motors & Actuators
All for dreams

Series SW2L
Motor type 404 385

Design Data	
Commutation	Brushed
Direction of rotation	Bi-directional
Bearing type	A:Ball - B:Sleeve

Performance data		
Rated voltage [V]	U_N	24
Nominal torque [Nm]	M_N	4.00
No-load speed [min^{-1}]	n_0	190.0
Nominal power [W]	P_N	73.1
Nominal current [A]	I_N	7.0
Nominal force [kN]	F_N	0.00
Duty cycle		s1

Sensor data	
Pulses	0
Output channels	0

Other data	
Gear ratio	103/4
Gear wheel material	plastic
Suppression components	4,7µH, 1nF
Enclosure class	IP 40
Weight [kg]	1.700

Remarks:

0278 AL

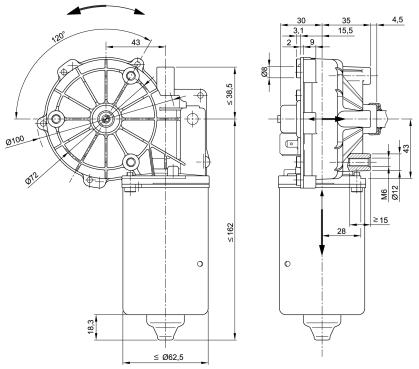

Motor picture

Characteristic curves

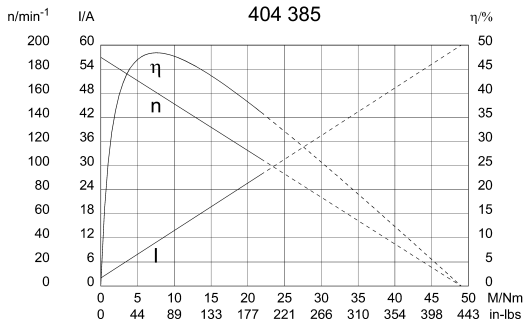

Output shaft drawing (W), Wiring diagrams (S) and Connector layout (K)

W 231

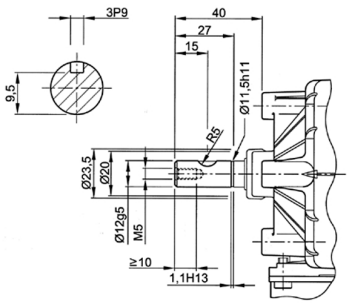

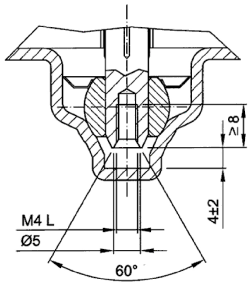

S 30

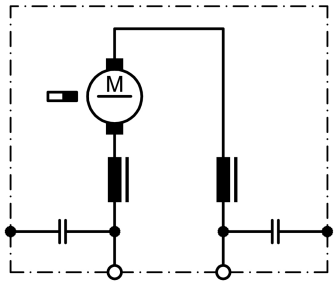

! Lefthand thread

NIDEC MOTORS & ACTUATORS
Europe: +49 7142 5083369 | North America: +52 656 629 3800
www.nidec-ma.com
sales@nidec-ma.com

Output shaft drawing (W), Wiring diagrams (S) and Connector layout (K)

K 144

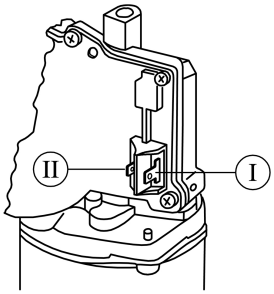

I Blade terminal ends 6,3 x 0,8 DIN 46 244
II Blade terminal ends 4,8 x 0,8 DIN 46 244

Notes