KWC-TYPE

DIMENSIONS

KWC-3640 BLDC SERIES

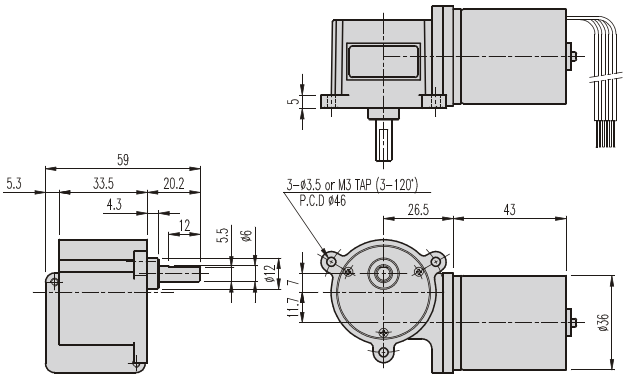

BLDC MOTOR PERFORMANCE DATA

ITEM / MODEL	VOLTAGE (DC)	NO LOAD		AT MAX. EFF.					WEIGHT (g)
		mA	rpm	gf.cm	A	rpm			
NB1-3640-053	12V	500	5300	150	1.2	4500			150
NB2-3640-050	24V	300	5000	250	0.8	3900			

AT MAXIMUM EFFICIENCY

MODEL / GEAR	NB1-3640-053		NB2-3640-050	
	DC 12V		DC 24V	
	rpm	kgf.cm	rpm	kgf.cm
1/25	180	3	156	5
1/30	150	3.6	130	6
1/50	90	6	78	6
1/60	75	6	65	6
1/75	60	6	52	6
1/100	45	6	39	6
1/125	36	6	31.2	6
1/150	30	6	26	6
1/200	22.5	6	19.5	6
1/250	18	6	15.6	6
1/300	15	6	13	6
1/375	12	6	10.4	6
1/500	9	6	7.8	6
1/600	7.5	6	6.5	6
1/750	6	6	5.2	6
1/900	5	6	4.3	6
1/1050	4.2	6	3.7	6
1/1350	3.3	6	2.8	6
1/1500	3	6	2.6	6

* ( ) color gear ratios are CW rotation direction. [when motor rotation direction is CCW]