ICE MAKER MOTOR

80W Ø120mm CONNECTOR TYPE

DIMENSIONS

K12IP80F□ + KGO SERIES

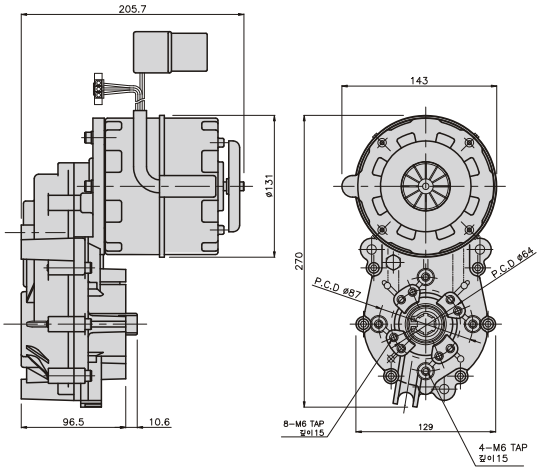

CONNECTION DIAGRAMS

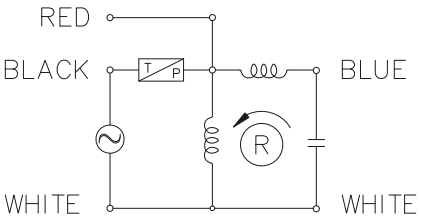

viewed from the end shaft of motor

SPECIFICATIONS

80W continuous rating, four poles

Model		Voltage (V)	Frequency (Hz)	Current (A)	Start T. (N*m kgf*Cm)	Rated T. (N*m/ kgf*Cm)	Speed (rpm)	Condenser (μF)
K12IP80FJ	single-phase	100	50	1.6	0.38/3.8	0.56/5.6	1400	25
			60			0.47/4.7	1670	
K12IP80FC		220	50	0.8	0.38/3.8	0.56/5.6	1400	6
			60	0.75		0.47/4.7	1670	
K12IP80FC		220	50	1	0.5/5	0.625/6.25	1250	6
			60	0.9		0.505/5.05	1550	

AT Rated

FREQ(Hz)	50		60		50		60		50		60		50		60	
MODEL KGO207C	RPM	Kg · m	RPM	Kg · m	RPM	Kg · m	RPM	Kg · m	RPM	Kg · m	RPM	Kg · m	RPM	Kg · m	RPM	Kg · m
1/207	6.8	8.0	8.1	8.0												